THE WILSON ADVANCE.

A WEEKLY DEMOCRATIC NEWSPAPER DEVOTED TO THE MATERIAL, EDUCATIONAL, POLITICAL AND AGRICULTURAL INTERESTS OF EASTERN NORTH CAROLINA.

Published Every Friday Morning.

Josephus Daniels, Editor and Proprietor.

FRIDAY MORNING, Sep. 1, 1882.

OUR NOMINEES.

For Congressman-at-Large.—R. T. Bennett.

For Supreme Court Judge.—Thos. Ruffin.

FOR SUPERIOR COURT JUDGES.

First District.—Jas. E. Shepherd.
Second District.—Fred Phillips.
Third District.—A. A. McKoy.
Fourth District.—Jas. C. McRae.
Fifth District.—Jno. A. Gilmer.
Sixth District.—W. M. Shipp.

FOR SOLICITOR.

Third District.—Swift Galloway.

WILSON COUNTY TICKET.

For Clerk Superior Court.—A. B. Deans.
For Register of Deeds.—B. J. Barnes
For Sheriff.—J. E. Farmer.
For Treasurer.—J. W. Farmer.
For Surveyor.—I. C. Eatman.
For Coroner.—H. W. Peele.

Whither are we Drifting?

The most careless observer of passing events, must have been often impressed of late, with the unquiet restless spirit of the times. Innovation in almost everything seems to be the order of the day. Change has succeeded change in such rapid succession, that a sense of the instability of our most cherised rights and privileges has become painfully acute.

The experience of the past seventeen years taught us many painful lessons—has introduced us to many keen and bitter disappointments. During this time we have seen the overthrow of much that we fondly imagined was as permanent as anything pertaining to human affairs. We have seen the overthrow of institutions, cherished and upheld by generation after generation of wise and good men—of principles dear to the heart of the patriot and the philanthropist, and of constitutions and governments, which it required the wisdom and experience of statesmen to construct and perfect. We have been compelled to witness the destruction of almost everything of the past, around which our affections had entwined themselves, and accept the miserable substitutes which unprincipled adventurers and political tricksters have imposed upon us. But heaviest of all the "woes of the conquered" have been the hypocritical, Godless teachings of New England Puritanism.

Years of undisputed sway, with all the favorable appliances that a resistless government, administered by its faithful High Priests, could give, have afforded time for the hateful seed scattered broadcast throughout the land, to germinate and bring forth their poisonous fruit. And what do we see? The standard of morality everywhere has retrograded—the tone of society has been lowered. Virtue, integrity and patriotism, are classed as fossils of a former generation. Thieves and swindlers fill the most honorable and profitable offices—crime stalks abroad through the land "unwhipt of justice"—vice holds high carnival at the capitol of the nation, and corruption sits enthroned in the most exalted places.

Whither are we drifting? What is to check the flood-tide of vice, immorality and irreligion which threatens to overwhelm us? Are we to have in this latter half of the nineteenth century—in this boasted land of freedom, of virtue, intelligence and pure religion, the disgraceful and revolting scenes enacted, which followed the French revolution? They abandoned the old landmarks,—cut themselves loose from the teachings of the past, to follow a more expansive morality—a broader philanthropy and a more sublimated philosophy. And humanity shudders at the scenes which they enacted, in the name of "liberty, equality and fraternity," in that age of reason and progress. Not only were all social distinctions abolished to curry favor with the dregs of society, but the sacredness of the domestic relations was invaded and the holiest of human ties became the object of ridicule and contempt.

Let any one look at the picture which the faithful history of those times presents, and compare it with the present aspect of affairs in our own country, and he will be startled by the many points of resemblance. Let him compare the "sans culottism" of that day, with the elevation of an ignorant race to all the rights of citizenship and the full enjoyment of the elective franchise. Let him observe the fearful decay of morality, the alarming increase of infidelity, the growing indifference to the most sacred obligations, and the general departure from the principles and practices of our wise patriotic and virtuous forefathers, and he will not be surprised at the cry of the mongrel party to-day, "down with the Bourbons." Many may utter it thoughtlessly, but the leaders know that it means the death-knell to our present social organization, our intelligence, culture, wealth and social position, would be at the mercy of the "sans culottes" of to-day, but for the Democratic party. As we value our priceless heritage, let us bend all our energies to strengthen and uphold that grand old party, from which alone we can hope for safety.

Radicalism or Democracy.

The question presented to the people of North Carolina during the present campaign, is, to which of these two parties, will they entrust the future government of the State? Under democratic rule we have had an economical administration of public affairs, and peace and unexampled prosperity reigns throughout our borders. The relations between the two races were never more satisfactory, and such rapid developments of our varied resources, were never before witnessed.

Shall we go back to the dark days of reconstruction and the gloomy years which followed, when the public welfare was committed to ignorant and irresposible hands, or shall we continue in power the party which under many difficulties, has caused the "desert (which Radicalism left our good old State) to blossom as the rose?" Let it be remembered, that Radicalism, stripped of the "shams and pretences" under which it appeals to the people to-day, is the same that it was them. "The Ethiopian has not changed his skin nor the Leopard his spots."

It would be the height of folly, for the people to allow themselves to be deceived by the thin disguise, under which the same party which bankrupted the States appears as the anti-prohibition--liberal--republican party. This party with many aliases, now seeks to obtain control of the State Government. And backed by the power and patronage of the General Government, dispensed through the different departments and Revenue Rings, appeals to the disappointed and disaffected (not always unsuccessfully we regret to say) to swell the ranks of the opponents of the Democratic party.

All who have heretofore sustained the Democratic party, when they compare the records of Radicalism and Democracy, have reason to feel proud of their party and every incentive to labor actively and earnestly, for its success. If the 140,000 white democratic voters of the State are true to themselves and appreciate the blessings of good government which their party has conferred all the efforts of the opposition will prove unavailing. The bare possibility that our State Government may pass under the control of the 105,000 negro voters and their white allies, should prompt every democratic voter to make any sacrifice of prejudice and self-interest to avert the impending danger of negro domination.

The question is narrowed down to this, will the people of North Carolina continue to sustain the Democratic party which has proved faithful to every trust, or will they surrender the government to a party which must soon be controlled by 105,000 ignorant negroes? Shall it be the Caucasion or the negro? "Under which King Benzonian?"

True Democratic Principles.

Somebody who hails from Wilson has written a letter to the Raleigh *State Journal*, the organ of the Radical-Liberal-Mottled Coalition, in which he says "your paper is doing good work and deserves the support of all who desire the perpetuity of *true* democratic principles."

True Democratic principles, indeed! Support a paper to obtain the perpetuity of true democratic principles which week after week attacks every prominent democrat in the State, Senator Vance, Judge Bennett, Governor Jarvis, Wharton J. Green and our other leading men, and has only honeyed words for Dockery, Mott, Cooper and the others of the same crew! Support a paper to get true democratic principles that is run in the interest of Mott, Cooper & Co., who are working like beavers to defeat that party! Support a paper to get true democratic principles which plants at its mast head as its candidates Dockery, Moore, and other life-long radicals, and Edwards and other renegade democrats! If the *State Journal* is the exponent of *true* democratic principles, or for that matter for any kind of principles except those which will advance the interest of J. J. Mott, we have failed to see any single article in the paper which would indicate that such was the case, and a paper is generally known by its utterances.

Our Wilson friend above referred to either is a radical of the deepest dye and writes to convey the impression that he is a democrat, or if a democrat surely he has never read the paper which he supports because he desires the "perpetuity of *true* democratic principles."

We commend to his careful perusal an article which will be found in this issue of the ADVANCE on "Radicalism *vs* Democracy," which ought to convince him that he is basing his support to the radical organ on a false basis.

If a man desires the perpetuity of *true* radical principles; the return of the radical rule of '68 and '69; negro domination; and a thousand concomitant evils which will surely follow in their wake, we can assure him that for such principles and such condition of affairs, the *State Journal* contends most zealously.

Leach and Price.

These peripatetic patriots are singularly unfortunate in the position which they occupy before the public. They agree in scarcely anything except their abuse of the Democratic party. We paid strict attention to their speeches in this place and would not misrepresent them. But we have never heard two speakers belonging to the same political party, disagree in so many particulars.

The antecedents of General Leach are well known in all parts of the State, and in none better than here. He delights to speak of his long public service and his uniform success as a politician. Perhaps he paid more attention then, than now, to Hamlet's advice to the players. None can excel him now in "sawing the air"—in "tearing a passion to tatters," or with high sounding phrases "splitting the ears of the groundlings." With him all is "sound and fury, signifying nothing, *cox preterea nihil*." A feeling of pity rather than resentment, we are sure, filled the heart of every democrat who heard him in Wilson. His speech was so incoherent—his gesticulations so wild and startling, and his postures so ridiculous, that a sense of mortification excluded every feeling of merriment.

Capt. Price is a graceful, fluent and forcible speaker, but his desertion of the Democratic party, and his constant repudiation of the Republican party, left him without a party or following in this section. His excuse for his desertion was the old threadbare one about not redeeming party pledges. He made no defense of the Republican party, but directed his efforts towards building up a co-alition party or organization which should hold the balance of power between the republican and democratic parties. His speech upon the whole was like the old Squire's opinion of the late Chief Justices decision, "plausible, but not strengthy."

The want of harmony between the speakers, except upon the county government question, upon which each had occupied both sides, made their assaults upon the democratic party fall harmless to the ground. The democratic party is too strongly entrenched in the hearts of the people of Wilson county, to be dislodged by the charming voices of deserters

"Charm they never so wisely."

Profanity of Public Speakers.

"Evil is wrought by want of thought,
As well as want of heart."

If some of the upright gentlemen who have addressed the people from the hustings since the inauguration of the present campaign should be charged with blasphemy by their opponents, they would resent the imputation with no less surprise than indignation. Yet they would find, to their mortification and discomfiture, an appalling mass of evidence against them. "*Hallowed be thy name*," is at the very head and front of THE PRAYER which Jesus taught for all men in all conditions and all ages. "Thou shalt not take the *name* of the Lord thy God *in vain*" is a command of similar precedence and moment in the Decalogue; and yet we find political orators, aspiring not only to "that grand old name of gentleman," but to the higher one of "Christian statesman," bawling out, to emphasize every utterance which they wish to render impressive, "My God, fellow citizen," &c. From the high character of some of these parties addicted to this fault we know it is a sin of inadvertence, and it is *for that reason* that we call their attention to it. Just think of "My God, fellow citizens, your apples be left to rot on the ground!" "My God, fellow citizens, would you raise the price of sole leather?" Such are examples of the trivial matters which provoke to an invocation of that Great name which above all names in Heaven or earth. Call us sanctimonious and sermonizers, if you please, we shall continue to protest against this blasphemy. Any speaker who cannot be forcible without insulting the immortal name of God, had better give way to others whose resources in the way of language are not so restricted.

A Selfish Motive.

This is becoming a selfish world. Men every day are becoming more selfish and are more largely than formerly actuated by motives that are other than selfish. There is no sign of the times as alarming as this, because selfishness means a disregard of principle, of right and justice. It sees no farther than self and cares for nothing that will not benefit self. This thought was brought very forcibly to our mind a few days ago when in conversation with a gentleman of much more than ordinary intelligence who has since the war been an earnest, active, working Democrat, he said "Why should I be a Democrat? What has the Democratic party ever done for me? And going from this standpoint which regards only self, he goes on reasoning himself into the belief that he ought to leave the Democratic party because, as he thinks, it has never done anything for him. There are other men who are now holding the erroneous views of the gentleman referred to. Some of them are holding to this position, in order to give the merest semblance of a reason why no honest man should leave the Democratic party we remark first that the Democratic party has done much for the men who fail to see its works. It has given them an honest government; it has given them a free ballot; it has given them efficient public schools; it has secured to them peace and prosperity and guarantees to preserve their rights and liberties inviolable; it protects them from negro domination with its concomitant train of evils. It pledges itself to protect the life and their property. Is not this enough? Is not a party that has done all this worthy of confidence? Has the Republican party done more? Is it more worthy of confidence and support?

We trust no man who has been affiliated with the Democratic party will be deceived into believing that party which alone is the friend and protector of the white man in the South because, forsooth, that party has not recognized him as he believes it should have done. Far more noble and unselfish is it to bear any personal slights we may receive we have received than to desert to the Radicals, a taste of whose misrule the white people of North Carolina have already had, and which bitter taste they have not forgotten. Democrats should ponder well before taking a step that is prompted only by selfishness.

"Better to bear the ills we have
Than fly to those we know not of."

Internal Revenue Corruption.

The Democrats demand the entire abolition of the Internal Revenue system for many reasons.

Among them are the following.

1. Its employees constitute a well disciplined corps of partisan agents supported at government expense.

The mere statement of the objection carries conviction to its force and truth along with it. Places in the Revenue service are given as rewards for services rendered to the Radical party and are held by the continuance of such service.

Think of the thousands of men in the Revenue service, and of the work they are daily doing for the Radical party. And yet these same officials are paid and clothed out of taxes that come in as full measure from Democrats as Radicals.

Is it right to take Democratic taxes and feed Radical partisan agents with them?

2. The patronage of the system affords a never failing source of corruption; it enables collectors to buy up voters and to use canvassers in the field at Government expense.

The abolition of the system would break up these nests of political patronage which have tested the States for twenty years and have been the source of more tyranny and of more interference with the freedom of the elections than the patronage of the Federal power than has ever been known in the history of the country.

The system is a fearful nest from which patronage hatches the instruments for controlling the elections in the States. Does not every man in North Carolina know this?

How to Organize.

The State Executive Committee request the publication of the following programme for organization:

1. Let there be a County Committee composed of active, working zealous, intelligent men.

2. Let there be Township Committees *composed of the very best men in the township*. Right here the work is to be done, and hence the absolute necessity for the very best men the party has in the township.

3. Let each township be divided into convenient districts, with known, well defined boundaries, as far as possible, such as roads, creeks &c., each committee-man taking one sub-division under his special charge. In each sub-division let there be a sub-committee of three, or four or five, or as many as need be, with its proper township committeeman at its head, and appointed by him. This sub-committee is to report to its chairmen and operate under his directions.

4. Let each sub-committee, by the 7th of October, prepare two lists of all voters in its sub-division, one for its own use, the other to be given to its chairman.

5. Let each sub-committeeman and each township committee man, examine the registration books from time to time, and check off the voters who have not registered, and then use every effort to get Democratic voters to register.

6. On the 14th October, let each sub-committee meet with its chairman and check the democratic voters who have not registered, and make arrangements for inducing them to register. On 28th October let them meet again for the same purpose.

On election day let the township and sub-committees be early at the polling places with their lists of voters. Let the names of voters be checked off as they vote, and at 1 o'clock let a list of absent Democratic voters be made by the township chairman and given to the sub-committee men, who will at once proceed to ascertain if the absentees cannot be induced to come to the polls and vote. For this purpose the chairman of the township committee must have provided suitable conveyances and have them constantly ready to hand.

If this simple plan be carried out our majority in the coming election would not be a vote less than 30,000. It must be remembered that the Radical party always polls its full strength. For its organization it has money in abundance, while we have to rely upon the fidelity and patriotism of our people. Let us see if we cannot put to rout again these 105,000 negroes. If we organize properly we will do it, for there are 190,000 white voters in the State. All we have to do is to bring them out. There are 50,000 who have never voted. Of this 50,000, nine out of every ten will vote the Democratic ticket if they go to the polls. Let us see that they get there.

Gen. Leach's frequent allusion to the sad fact that North Carolina had not been honored with a nomination for the Vice Presidency since the war in his speech at this place last week, drew from Mr. Busbee the suggestive inquiry whether he was a candidate for that office. It now turns out that Gen. Leach did say in Morganton that he expected to be a candidate for the Vice-Presidency, and he ought not to have denied it when he was pressed by Mr. Busbee.

The *New South* thinks Brunswick the only county where there is no resident lawyer. Caret has no resident lawyer, and we expect there are other such counties in the State, especially in the West. We are under the impression that no lawyer resides in Hyde county, although we are not certain that such is the case.

A shocking story comes from Ashville, Tennessee. David Hughes, wealthy, seduced his step-daughter, Mary Payne, and then hired an ex-penitentiary convict to marry her. Hang him.

The Washington *Post* says the office holders in Virginia and the Mahone 5 per cent. assessment circular as imperative as brass knuckles.

Trull, a straightout republican, has been nominated for Congress in the 8th district against honest Bob Vance.

MISCELLANEOUS.

FOR RENT.

THE CORNER STORE AND WAREROOMS, formerly occupied by Hilliard, Garrett & Battle, and situated in the business part of the town of Whitakers. Also my Cottage Residence which stands in the most desirable part of the town. Possession of the Store given any time. Residence on the 1st of December. Terms very easy.

Apply to J. M. CUTCHIN, Whitakers, N. C.

Aug.11tf.

THE OLDEST AND BEST.

When at Nashville stop at the Griffin House, the oldest and best hotel in the place. Board and Lodging per day $1.75.

J. D. MUSTIAN, Manager.

june23-3m

MISCELLANEOUS.

BUY THE BEST!

HALL'S

IMPROVED SELF-FEEDING

COTTON GIN

COTTON GIN FEEDERS

AND

CONDENSERS

Endorsed and recommended by the best farmers in North Carolina, among whom we take pleasurs in referring to W. F. Parker, Enfield; D. Edmundson, Scotland Neck; Jas. Hodges, Dr. N. J. Pittman, H. L. Staton and E. M. Bryan, Tarboro W. D. Barden and W. E. Lewis, Goldsboro; N. Cutchin and J. H. Cutchin, Whitakers; A. J. Harrell, Fremont and many others who have used them. Mr. J. J. Battle, of Rocky Mount, one of the best farmers in Edgecombe county says: "The Hall's Self-Feeding Cotton Gin, manufactured at Sing Sing, N. Y., worked to my entire satisfaction. In ginning my entire crop we averaged about 4,500 lbs. seed cotton per day, with the attendance of two hands—one to drive the team and one to attend to the gin."

Send in your orders to

ROUNTREE, BARNES & CO., AGENTS.

WILSON, N. C.

july7 tf

NOTICE.

THE UNDERSIGNED, have formed a co-partnership for the practice of medicine in the town of Wilson and adjoining country. Returning thanks to their patrons for their liberal patronage, they solicit a continuance of the same. Office on Nash Street opposite the Court House lately occupiedby Jas. S. Woodard, Esq., where one, or both may be always found when not professionally engaged.

C. C. PEACOCK, M. D.,
W. S. ANDERSON, M. D.

Jan22 82-1y.

ANNOUNCEMENT.

I hereby announce myself as a candidate for the office of Register of Deeds of Nash county subject to the action of the Democratic Nominating Convention.

B. H. VESTER.

aug25-tf

MISCELLANEOUS.

SAM. B. WATERS,

TARBORO STREET, WILSON, N. C.

SIGN OF THE

"BIG INJUN,"

KEEPS on hand, and is constantly in receipt of Groceries, Whiskies, Brandies, Rum, Gin, Ales, Porter, Beer, Wines, &c., &c. A fine line of Tobacco and Segars, Confectioneries, Crackers and Cakes.

FINE BOTTLED LIQUORS,

For Medicinal Purposes, warranted pure and unadulterated.

☞ Mr. William I. Strickland, of Nash Co., is with him and will be pleased to see his friends

Aug.19-tf.

BRYAN HOUSE,

TARBORO, N. C.

A FIRST-CLASS HOTEL.

Large Sample Rooms for Commercial travelers. H. B. BRYAN,

je9-1y Proprietor.

DINING ROOMS,

Near Railroad Depot,

ENFIELD, N.C.,

Stop and get a Good Dinner, Supper or Breakfast. Board by the Day or Month. Prices very reasonable.

Respectfully,

RIDDICK BURNETT,

may5-1y Proprietor.

DR. R. W. JOYNER,

Surgeon Dentist

☞ Has permanently located in Wilson, N. C. All opperations will be neatly and carefully performed and on terms as reasonable as possible. Teeth extracted without pain. Office Tarboro street next door to Post office. [Jan 3 12m.]

MANSION HOUSE—

NORFOLK, VA.

M. S JAMES, Proprietress.

ENLARGED, Remodeled, Refurnished, Centrally Located, Good Accommodations, Rates Reasonable.

2-2tf

DEANS & NICHOLSON,

GENERAL INSURANCE AGENTS,

WILSON, N. C.

Fire, Life, Accident and Live Stock Companies represented. Aggregate Assets over $300,000,000.

EXCELSIOR COOK STOVES!

THE BEST IN THE MARKET.

LEADING FEATURES:

Double Wood Doors, Patent Wood Grate, Adjustable Linings, Interchangeable Ventilated Shelf, Pacific Swinging Hearth Plate, Window Fire-Stop, Reversible Gas-Burner, Long Draw Piece, Double Short Draw, Heavy Ring Covers, Illuminated Fire Door, Naked Knobs, Nickel Panels, etc.

Unequaled in Material, in Finish, and in operation.

Manufactured by ISAAC A. SHEPPARD & CO., Baltimore, Md.

Sold by merchants generally. GEO. D. GREEN & CO., Wilson, N. C.

TO THE GINNING PUBLIC.

THE EUREKA LEVER POWER

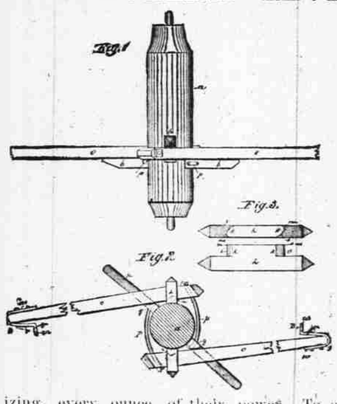

This Power, I am confident, will fill a long felt want, that every Farmer has sadly felt. It combines two of the most powerful known powers, viz:

PRIZE AND CAM-HOOK.

And is Cheap and Durable, and has been amply tested in driving the Gins of two of the most practical Farmers of the State—one for three seasons. Mr. Ed. Barnes, Sr., having ginned at the rate of eight bales per day, with a 40 Saw Gin, with 4 mules; in the other case doubling the amount of cotton ginned. Each lever works independently of the other, thereby utilizing, every ounce of their power. To apply this power to all ordinary Horse Gins requires two 2 inches to one inch rods 5 feet long. Bent irons are attached to the end of the lever in such a form, so as to utilize every inch of lever power possible, thereby gaining one to two feet at that important point, and is worth the amount I charge for the right in gold, of the first water, in one season. I charge Ten Dollars for each Gin, or will attach it to Gins, and furnish the irons for Twenty Dollars—the farmer furnishing the necessary help and timbers, which in most all cases consist of two levers 7 inches by 4½, tapering to 4½ or 5 at the other end, 18 feet long also a piece 10 inches by 3, 5 feet long.

Any further information may be had by addressing the undersigned.

COUNTY, STATE AND INDIVIDUAL RIGHTS For sale at a low figure. All I want is for one of the Powers to be used in each neighborhood, and its merits I do not fear, and feel confident it will secure the high favor that my Graves' Cotton Planter has worthily borne in thousands of the best farmers' fields, for which I return my thanks.

Respectfully Yours,

J. T. GRAVES,

WILSON, N. C.

aug25-2m

BOOKS, BOOKS, BOOKS!

ALFRED WILLIAMS & CO.,

BOOKSELLERS AND STATIONERS,

RALEIGH, N. C.

☞ WITH LARGELY INCREASED FACILITIES AND A DETERMINATION TO SERVE OUR CUSTOMERS FAITHFULLY AND PROMPTLY, WE OFFER A LARGE STOCK IN EACH DEPARTMENT AT

VERY LOW PRICES.

☞ SEND FOR NEW CATALOGUE. ☜

aug25-3m

Central Institute For Young Ladies.

Situated in Warren County, N. C., immediately on the R. & G. R. R., in one of the healthiest portions of the State and within ten minutes walk of the telegraph and post office, with two daily mails. The campus contains about twelve acres, and is beautifully shaded.

English Literature and Music Specialties. Our Music Teacher is a full graduate of the Wesleyan Female College, has seven years experience in teaching, and comes with the very highest endorsements. Instruments, new and interior to none used in any school. Near Panacea Springs; water furnished boarding pupils when desired. Charges very low. Fall term begins Sep. 4th., 1882. For Catalogues Address,

jul28-2m. J. M. RHODES, Prin., Littleton, N. C.

MISCELLANEOUS.

Elizabeth Iron Works

CHAS. W. PETTIT, PROP.

280 and 282 Water St., Norfolk, Va

MANUFACTURER OF

Engines, Boilers Saw and Grist Mills, Shafting, Pulleys, Hangers,

FORGINGS AND CASTINGS

OF EVERY DESCRIPTION.

may5-1y

Grand Opening of Spring Goods.

I have just returned from the Northern markets with a display of a large and complete line of Ladies' Dress Goods, Dress Trimmings, Hamburg Edgings, Ladies Trimmed Hats, latest styles, laces of all colors and prices, Corsets, Collars, Ribbons, ladies underwear, lace curtains of every style and colors. A complete stock of Mens', Boys' and Youths' Clothing, Furnishing Goods. A magnificent line of mens', boys' Ladies and children's Shoes. I have not purchased my Goods to fill up space, but to sell, and is money is same to offer my entire Stock, which is complete in each department. Every boy—and they must be in reach of everybody. Not to offer a few goods. Come and try my bargains before purchasing elsewhere.

JULIUS MEYER

WILMINGTON, N. C.

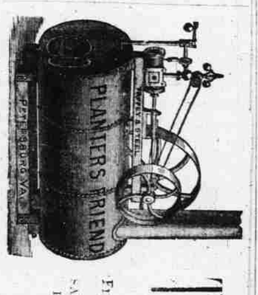

Tapley & Steel,

MANUFACTURERS OF

Engines, Tobacco, Hay and Cotton Presses

SAW MILLS, GRIST MILLS, MILL IRONS

FLOURS, IRON AND BRASS CASTINGS,

PETERSBURG, VA.

S. S. ALSOP,

ATTORNEY-AT-LAW,

Offices Enfield and Battleboro, N. C. Practices in the counties of Halifax, Edgecombe and Nash, and in the Supreme and Federal Courts. Will be at Battleboro on Fridays and Saturdays and on other days at Enfield.

may5-1y

BOARDERS WANTED.

The undersigned solicits the patronage of those desiring table board. Terms: reasonable.

R. L. ALLEY.

H. P. MURRAY. JOHN E. WOODARD.

MURRAY & WOODARD.

ATTORNEYS AT LAW,

WILSON, N. C.

Circuit, Wilson, Wayne, Pitt, Edgecombe and Nash counties.

Practice in State Supreme and Superior Courts, and in Federal Courts. May 5 82 1y.

W. SODEN,

Rocky Mount, N. C.

Defies the world in shoe-making, his prices are as follows: French Calf Boots, $6.00 to $8.00; French Calf Gaiters and Shoes of any shape $3.50 to $6.00. Work warranted to be hand-made. Fronted boots, best $8. W. SODEN, Jr. (je9

BED SPRINGS.

If you want the best Bed Spring now in use, try those made by J. G. Rawls & Bro. They are guaranteed to give entire satisfaction. Can refer you to numbers in town who are now using them. Try them and you would not do without them. Call for the Double Twin Bed Spring made by

J. G. RAWLS & BRO.,

may12 41 Wilson, N. C.

PATRONIZE HOME FOLKS

When They Can do as well For You

HUGH F. MURRAY represents the largest, cheapest, safest and oldest Regular Life Insurance Company doing business in Wilson. Give him your business and he will spend his money here among you. mar1-tf

ORGANS!

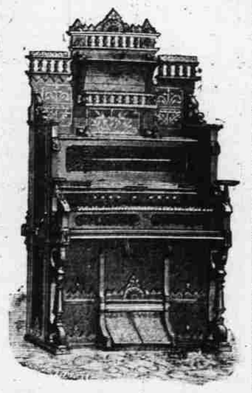

S. A. STEVENS & Co's

IS THE PLACE

To Buy The Best.

NORFOLK, VA.

34tf.

MISCELLANEOUS.

Shannon's

WILLOW TONIC

—OR—

INFALLIBLE CHILL CURE.

The attention of Druggists and Dealers generally is called to this most valuable medicine, which stands before the public and medical faulty undisputed as a cure for Fever and Ague, Bilious and Remitting Fever, Dumb Chills, Enlarged Spleen, and all diseases arising from malarial or miasmatic poisons. It is no quack nostrum or patent humbug claiming to cure all diseases, but only such a arise from malarial poisons, which are very prevalent in Eastern Carolina. Containing a very valuable preparation of Iron, it renovates the blood promotes the appetite and is a most potent Alterative. Certificates of its infallibility from some of our best citizens will be furnished upon application, and if it fails to give satisfaction when used according to directions the money will be refunded. Prepared only by

HENRY C. SHANNON,
Druggist and Chemist,
66 West Centre St.,
Goldsboro, N. C.

Aug19m]

Use "Young's P. P. Glasses" and save your eyesight.

J. T. Young & Bro.

—DEALERS IN—

FINE WATCHES, DIAMONDS, JEWELRY, SILVER WARE

Manufacturer of all kinds of

Plain Gold Jewelry, Rings, Badges, &c

The best $10, castor, and $5.00 clock ever sold. American watches at the lowest prices. Solid silver spoons, forks &c., cheaper than ever. Your orders are solicited and will be promptly attended by

J. T. YOUNG & BRO.,
PETERSBURG, VA.

30th '79-tf

RICHMOND

TYPE FOUNDRY.

PRINTERS' WAREHOUSE.

Book, News and Job Type—Cylinder, Job and Hand Presses, Cabinets, Cases, Stands, Inks, Roller Composition, &c.

H. L. PELOUZE & Son.,
Richmond, Va.

☞ The type on which this paper is printed was cast at the Foundry of H. L. Pelouze & Son.

may5 1y

NEW FIRM | NEW STYLES | NEW PRICES

GRIFFIN & MURRAY.

Goldsboro St., Wilson, N. C.

Manufacturers of Carriages, Buggies, Carts, Wagons, Harness and all kinds of riding vehicles, which will be sold at the lowest possible figures. We have now on hand a nice and select stock of work. Our prices are as low as the lowest. Be sure and call on us before buying. Satisfaction guaranteed in every case. Repairing neatly and promptly done.

W. A. Anderson.

Atlantic Foundry,

206 Water Street, Norfolk, Va.

Manufacturer of Every Description of

Castings Iron and Brass.

At short notice and Baltimore prices No Extra Charge for Patterns on Hand of which I have quite an Extensive Variety.

☞ Highest Cash Price paid for Metals.

March 2 1.

1865 COCKCADE MARBLE WORKS 1881

Sycamore Street, Petersburg,

GRAVE STONES

of every description, made to order ranging in price from $5 up. Designs sent by mail postage paid with stamps enclosed for return. When orders are received they are filled and forwarded. If the work is not satisfactory purchasers are requested to return it

MY EXPENSE.

No pay required until the work is delivered. Correspondence solicited from all parts of the country.

feb 25-1y CHAS. M. WALSH.

COME ONE, COME ALL.

LIVERY STABLES

STRICTLY A FIRST-CLASS HIRELING STABLE.

Village Carts, Tea Carts, Park Phaetons, Top Phaetons, Top Buggies, Dod Wagons, Gentlemens Road Wagons, the Latest Track Harness, Gents' Road Horses; also Farm Horses and Mules which we offer for sale cheap, either for cash or on time. Boarding Stable completely kept in the best style and by the most experienced hands at the lowest prices—$12.50. B. M. Selby will be on hand all the time, night and day, to attend to his friends. Try him once more.

T. H. SELBY
Wilson, N. C.

☞ We are located at Tysons' Old Stand—on west side Market House.

may12 tf

G. A. Ainslie & Sons,

RICHMOND, VA.

MANUFACTURERS OF

CARRIAGES OF ALL KIND.

Buggies, Phaetons, Six-seat Carriages, Jagger Wagons—Top and Top, &c. Send for circular