LET US DO YOUR PRINTING

In recent months we have installed thousands of dollars worth of new machinery, putting us in better shape than ever before for filling your orders.

We are now prepared not only to do high class work, but do it quickly and in large quanties.

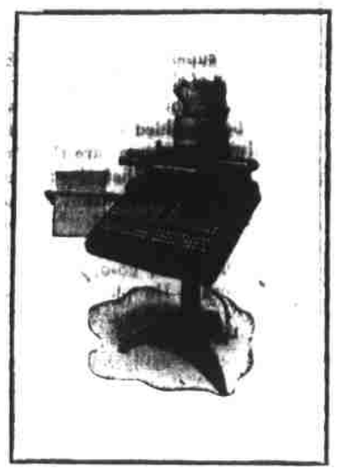

These two illustrations show the Lanston Monotype Machine, the same being composed of a keybord and caster. The Monotype casting machine is a complete automatic type foundry, producing type, borders and spacing material of any size at a speed that makes it cheaper to cast new than to distribute. It will turn a pound of metal into type of the highest quality in less than two minutes. With this machine we are especially well prepared to provide a variety of type for our patrons.

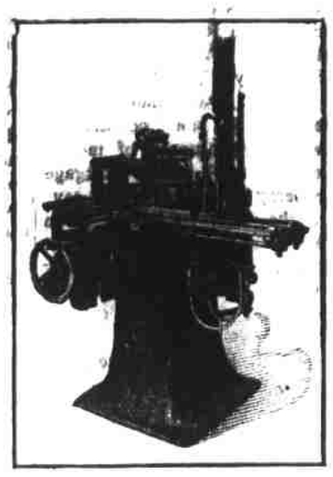

Monarch Cottrell Cylinder Press

This is the press on which the Daily and Semi Weekly Journal are printed It is a new and thoroughly up-to-date machine.

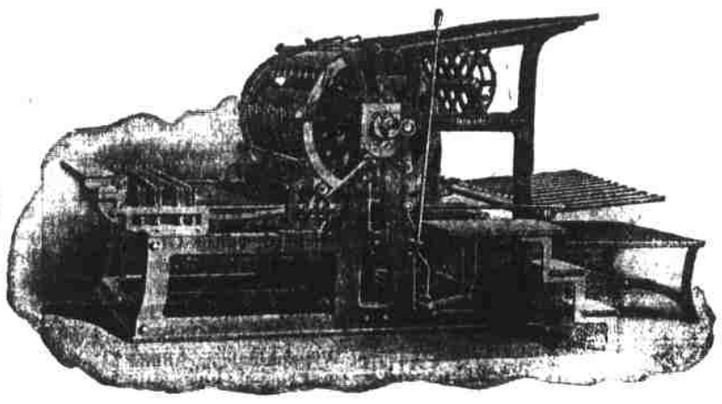

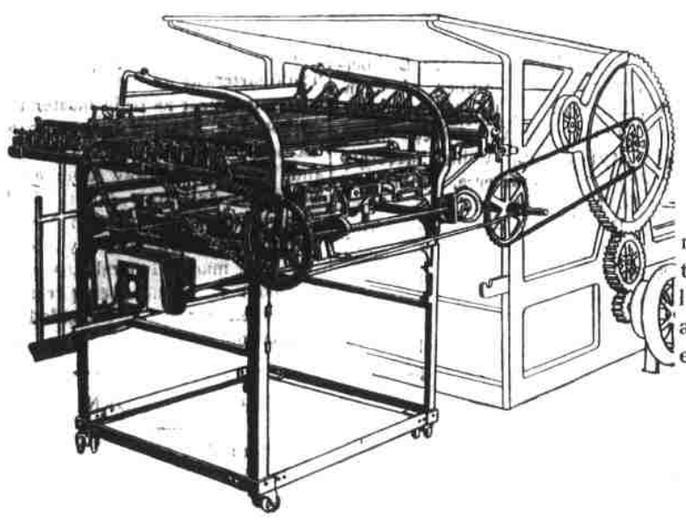

Omaha Folder.

This is one of the latest makes of folders. It is attached to the press and is a labor saver as most folders are detached and require an extra man to operate them.

New Series Chandler & Price Job Press

The cut below also shows a brand new machine—the largest job press we could buy. It will print a small size newspaper.

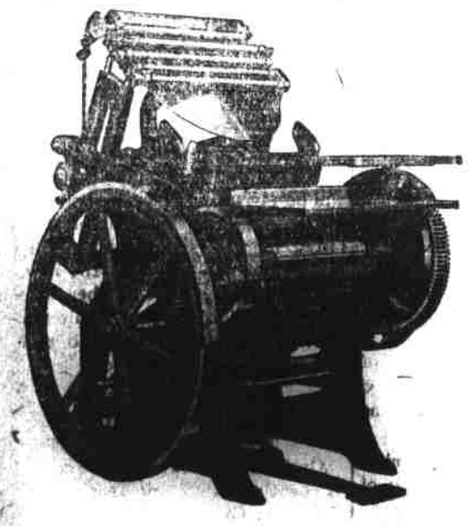

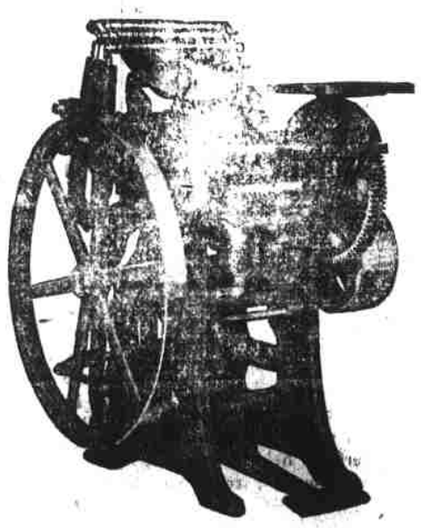

Another new job press, but smaller size than the other one shown. It is a New Series Chandler & Price, conceded to be the best job press.

Whether you need the ordinary lines of commercial printing or have a newspaper or magazine you want printed, it will be to your interest to see us before placing your order.

THE PRICES WILL BE MADE AS LOW AS POSSIBLE CONSISTENT WITH THE QUALITY OF WORK

E. J. LAND PRINTING COMPANY

Printers and Publishers

45 POLLOCK STREET - - NEW BERN, N. C.

AN EYE FOR BUSINESS.

The Way Disraeli "Put One Over" on Publisher Colburn.

When the Hon. Mr. Ward wrote his novel "Tremaine" he was fearful of acknowledging himself the author until its fate should have been ascertained. He accordingly, the better to preserve his incognito, sent the manuscript copy by the wife of his attorney to Mr. Colburn. The work, although accepted, was not considered likely to pay extremely well, and consequently a trifling sum was given for it. Contrary, however, to Mr. Colburn's expectations, it ran to three editions.

The ingenious author of "Vivian Grey," then twenty-two years old, having heard of the circumstances, determined to use it to advantage, and accordingly, having arranged his work for publication, he proceeded to find out the honorable gentleman's fair messenger. This he quickly effected and upon a promise of giving her £20 induced her to be the bearer of his novel to the same publisher.

The woman was instantly recognized by Mr. Colburn as the same person who brought him "Tremaine," and, recollecting the great sale of that novel, he leaped at the manuscript presented to him with the utmost eagerness. It was quickly read and a handsome sum given for the copyright. A short time, however, enabled Mr. Colburn to find out his error, but too late to remedy himself. The work was not successful, and a considerable sum was lost by its publication.

TRAPPING AN ERMINE.

One of the Reasons Why the Prized Fur Is So Costly.

"This stole of imperial ermine is worth $1,000," said the dealer. "Dear? Nix. Just consider how the animals comprised in it were caught!

"In the first place, they were caught in a winter of extreme cold, for it is only in such a winter that the weasel, or ermine, turns from tawny to snow white. In normal winters the ermine only turns to a greenish white, like this $400 greenish white stole here.

"In the second place, the ermines were caught young, for when fully developed their coats are coarse and stiff, as in this $250 stole, and to catch them young the tongue trap must be used. Any other trap would tear the delicate fur.

"The tongue trap is a knife, an ordinary hunting knife, smeared with grease, that the hunter lays in the snow. The little ermine sees the blade, which it mistakes for ice. Ice it loves to lick, and so it licks the knife blade and is caught fast, its tongue, in that zero weather, frozen to the steel.

"Yes, sir, when you see a stole like this don't begrudge a good price for it, for every ermine in it was tongue trapped in subzero weather—a mighty slow and painful hand process."—New York Tribune.

Butterflies That Live on Fish.

The butterfly was blue and transparent. As through blue glass its tiny heart could be seen beating inside its body, and the professor read a newspaper article through its lovely blue wings. "This," he said, "is the pteropoda, a Mediterranean butterfly. It eats fish. On its tongue are rows of pointed hooks. They serve as teeth. This beautiful creature would turn up its nose at a garden of roses and lilies but it would feast ecstatically upon a putrid eel. Now and then a pteropoda is found on the Florida or the California coast. It is only abundant, though, in the Mediterranean."

TOYS GOING CHEAP.

The closing out toy sale at McSorley's toy store in the James Hotel building on Middle street will continue through Monday, Tuesday and Wednesday. All toys must be sold regardless of cost. So they will be marked down to cost and below. Needed but in some cases starts Christmas to bring just what little folks most wanted. If so, now is your chance to make their little hearts happy. Come to McSorley's and get Christmas of the very low prices they are going for. C. L. McSorley. (Adv.)

TASTE, SMELL AND HEARING RESTORED

A Simple, Harmless Remedy Quickly Relieves Catarrhal Deafness.

The thousands who suffer the miseries of colds and catarrh and claim they have never found a cure can get instant relief by simply anointing the nostrils with Ely's Cream Balm.

Unlike internal medicines which upset the stomach, or strong snuffs which only aggravate the trouble, this cleansing, healing, antiseptic Balm instantly reaches the seat of the trouble, stops the nasty discharge, clears the nose, head and throat, and brings back the sense of taste, smell and improves the hearing. More than this, it strengthens the weakened and diseased tissues, thus protecting you against a return of the trouble. This remedy will cure a cold in a day, and prevent its becoming chronic or resulting in catarrh.

Nasal catarrh is an inflammation of the membrane lining the air passages, and cannot be reached by mixtures taken into the stomach, nor can it be cured by snuffs and powders which only cause additional irritation. Don't waste time on them. Get a 50 cent bottle of Ely's Cream Balm from your druggist, and after using it for a day you will wish you had tried it sooner.

Mothers should give the children Ely's Cream Balm for colds and croup. It is perfectly harmless, and pleasant to take.

Stubborn Case

"I was under the treatment of two doctors," writes Mrs. R. L. Phillips, of Indian Valley, Va., "and they pronounced my case a very stubborn one, of womanly weakness. I was not able to sit up, when I commenced to take Cardui.

I used it about one week, before I saw much change. Now, the severe pain, that had been in my side for years, has gone, and I don't suffer at all. I am feeling better than in a long time, and cannot speak too highly of Cardui."

TAKE CARDUI The Woman's Tonic

if you are one of those ailing women who suffer from any of the troubles so common to women.

Cardui is a builder of womanly strength. Composed of purely vegetable ingredients, it acts quickly on the womanly system, building up womanly strength, toning up the womanly nerves, and regulating the womanly system. Cardui has been in successful use for more than 50 years. Thousands of ladies have written to tell of the benefit they received from it. Try it for your troubles. Begin today.

Write to: Ladies' Advisory Dept., Chattanooga Medicine Co., Chattanooga, Tenn., for Special Instructions, and 64-page book, "Home Treatment for Women," sent free. J 52

BAPTIST LAYMEN

WILL HOLD GREAT CONVENTION IN CHATTANOOGA, FEBRUARY 4, 5 AND 6, 1913.

Representatives of 2,500,000 Southern Baptists to Hold First Great Mission Convention in South.

Anticipating an epoch making period of three days, praying for success in so great an undertaking, happy with the occasion, Baptist laymen all over the south, representing a brotherhood of 2,500,000 in one of the most favored sections under the sun, are preparing to move on to Chattanooga, Tenn., for the great convention to be held in that city February 4, 5 and 6, 1913, in the 4,500 capacity auditorium that has already been erected and will be specially fitted up with all conveniences for the occasion.

Ready to Welcome Visitors.

Chattanooga stands ready to welcome the visitors and the demonstration is expectant. From all over the territory embraced by the Southern Baptist convention the hosts will journey to the East Tennessee metropolis to be present on the dates mentioned in order that they may join in what bids fair to be not only the greatest religious gathering of the winter, but

City Auditorium at Chattanooga, Tenn.

one of the greatest in history. The promoters of the plans for the convention anticipate an attendance of 2,000 laymen and 1,000 ministers and they see no reason, realizing the strength of the Southern Baptist constituency, why there should not be 3,000 delegates present in all, to join in so great an occasion.

Chattanooga Baptists pursued an aggressive policy to secure this convention, which will be the first of its kind ever held by Southern Baptists. No efforts were spared in the campaign to secure it. Not only the Baptists but also representatives of other Christian bodies, as well as civic officials, joined in the effort. For days the meeting place of the convention was undecided upon, as other cities offered such flattering inducements, but finally the word was given out that Chattanooga had been selected and immediately all concerned got busy making preliminary preparations.

The president of the Southern Baptist laymen's movement is Dr. J. Harry Tyler, of Baltimore, Md., and the secretary is Dr. J. T. Henderson, of Bistol, Tennessee-Virginia. Both of these gentlemen visited Chattanooga and other contesting cities, and at Chattanooga, the place finally selected, they were guests of the Baptist pastors' conference, while they were looked out after by the wide-awake manager of the Hotel Patten, one of the largest in the south, Houston R. Harper, a Baptist, who was active in the campaign for the securing of the convention for Chattanooga.

After Chattanooga had been chosen then there began an active campaign throughout the south to organize the lay forces and impress upon them the importance of the convention and what it will mean to the denomination.

An Ideal Location for a Convention.

No better place than Chattanooga could have been chosen for the convention. When the Southern Baptists held their convention in that city last winter there was a great outpouring of the people of the city and the nation expressed in the enthusiasm with which the convention was received. The city is easily accessible from all points, being the meeting place of the Southern railway, the Nashville, Chattanooga & St. Louis, the Louisville & Nashville, the Georgia Southern & Florida, the Central of Georgia, the Atlanta, Birmingham & Atlantic, the Tennessee, Alabama & Georgia, the Atlanta, Knoxville & Northern, the Cincinnati, New Orleans & Texas Pacific, the Southern, the Alabama Great Southern, the Cincinnati, Chattanooga & St. Louis, the Chattanooga Southern, the Chattanooga & Lookout Mountain, the Chattanooga & Chickamauga, the Chattanooga & Tennessee River, the Chattanooga & Ringgold, the Chattanooga & Dalton, the Chattanooga & Cleveland, the Chattanooga & Knoxville, the Chattanooga & Lake Winnepesaw, the Chattanooga & Nashville, the Chattanooga & Ringgold, the Chattanooga & Rome, the Chattanooga & Tennessee River, the Chattanooga & Tennessee River, the Chattanooga & Tennessee River